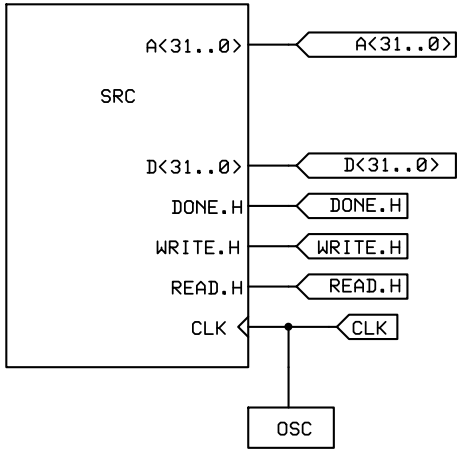

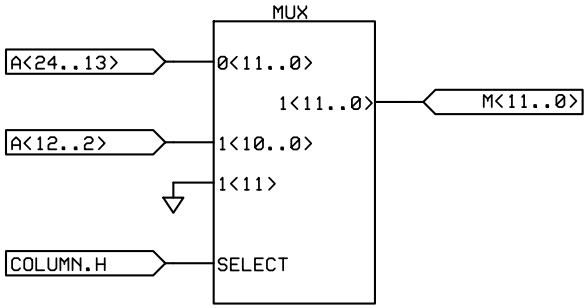

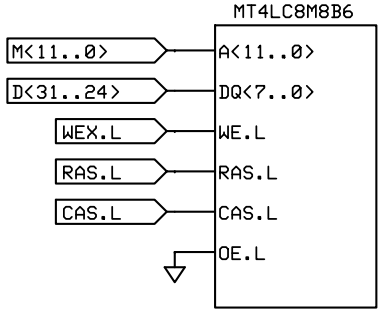

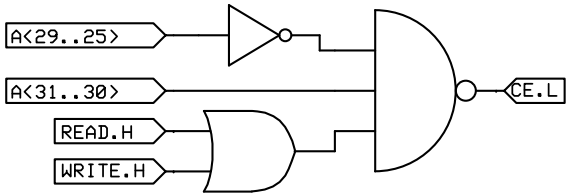

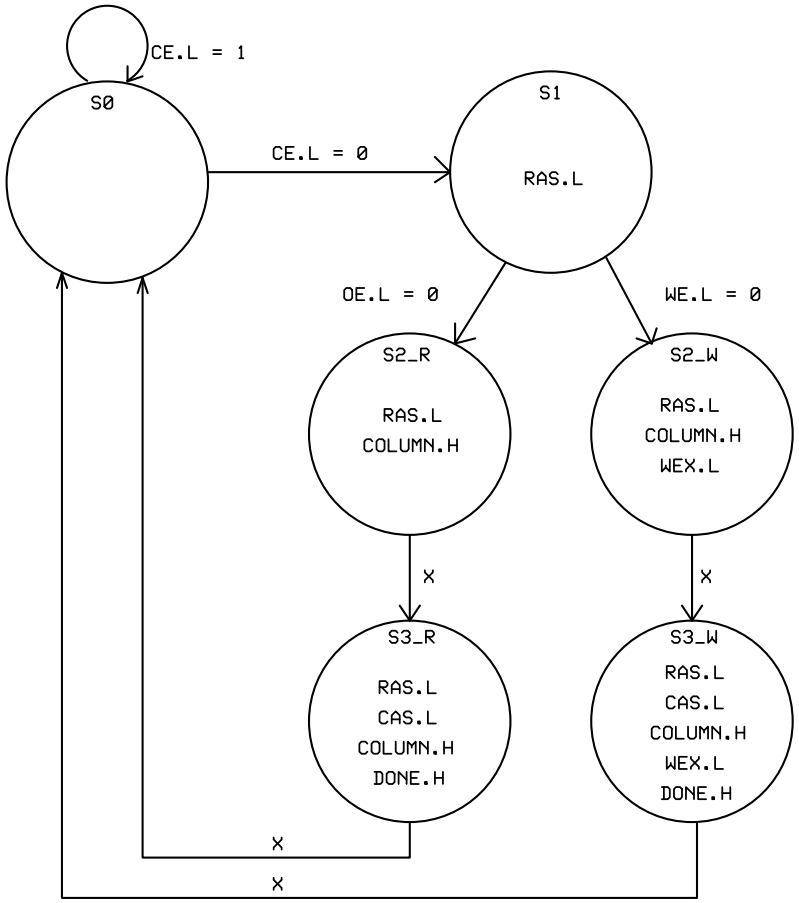

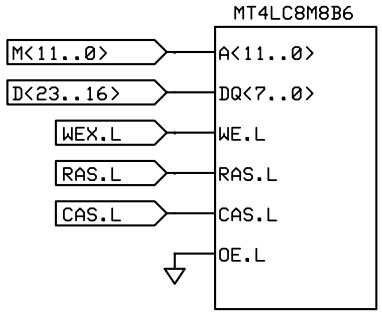

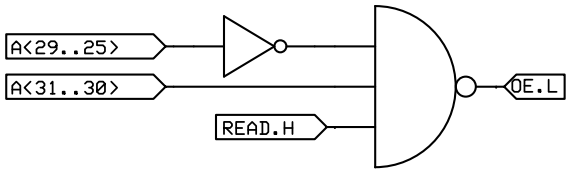

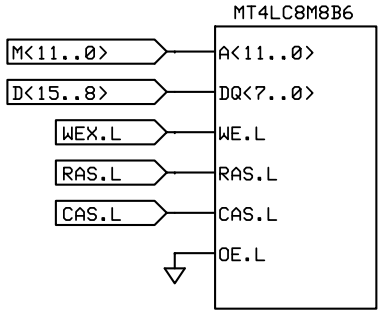

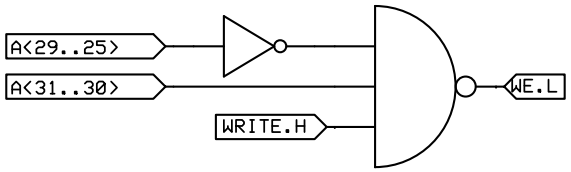

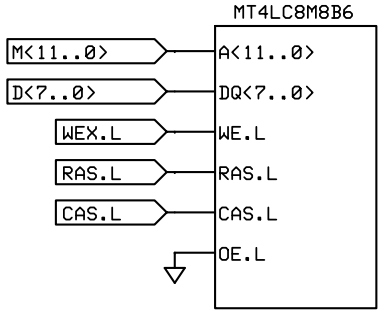

VALID OUTPUT=STATE ASSIGNMENT

RAS.L	CAS.L	WEX.L	COLUMN.H	DONE.H	
1	1	1	0	0	S0
0	1	1	0	0	S1
0	1	1	1	0	S2_R
0	1	0	1	0	S2_W
0	0	1	1	1	S3_R
0	0	0	1	1	S3_W

CSE 362M

FPM DRAM Moore Example

W.D. Richard | Rev 1.0 | 10/07/2014 | Page 1 of 1